Technical specification and design values Volter 40 Indoor

All data in this datasheet are subject to change. Volter Oy reserve right to change data without notice. All values are design values. Volter units are CE-marked. Any other certifications are out of scope. Volter units are designed to run on wood chips (specification to be supplied by Volter). Any other fuel use is on purchaser responsibility. Purchaser understands the fluctuation of output in biomass energy production applications. The output stability is not comparable to use of homogenous fossil fuels.

Specification		
Model	Volter 40 Indoor	
Max output power, electrical	40	kW
Max output power, heat	100	kW
Electrical output can be adjusted	30…100	%
Maximum annual run time approx.	7 800	hours
Certificates	CE-marked product	

Volter Oy
Rytiniementie 1
FI-91910 Tupos
Finland

VAT number FI11061431
+358 40 739 0461
sales@volter.fi
www.volter.fi

Dimensions

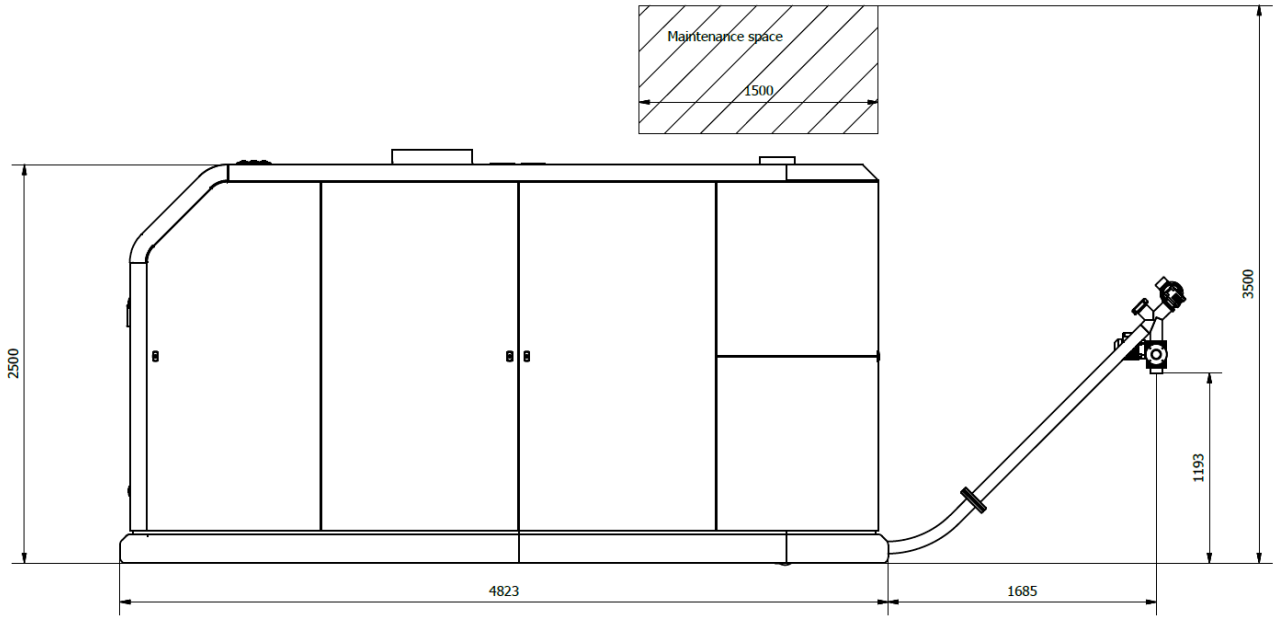
Maintenance space
1500
2500
3500
1193
4823
1685

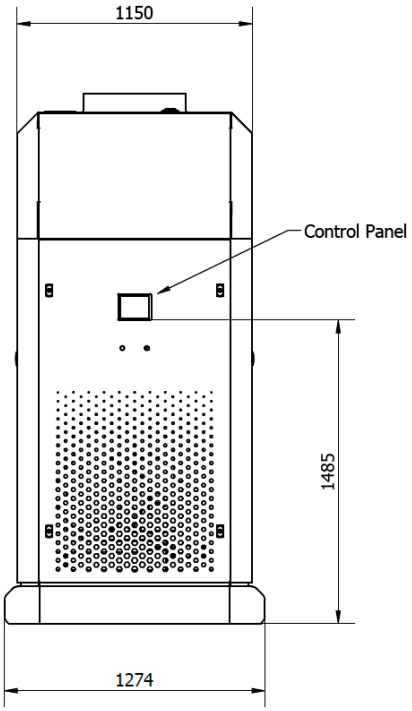
1150
Control Panel
1485
1274

Required maintenance spaces

Single installation

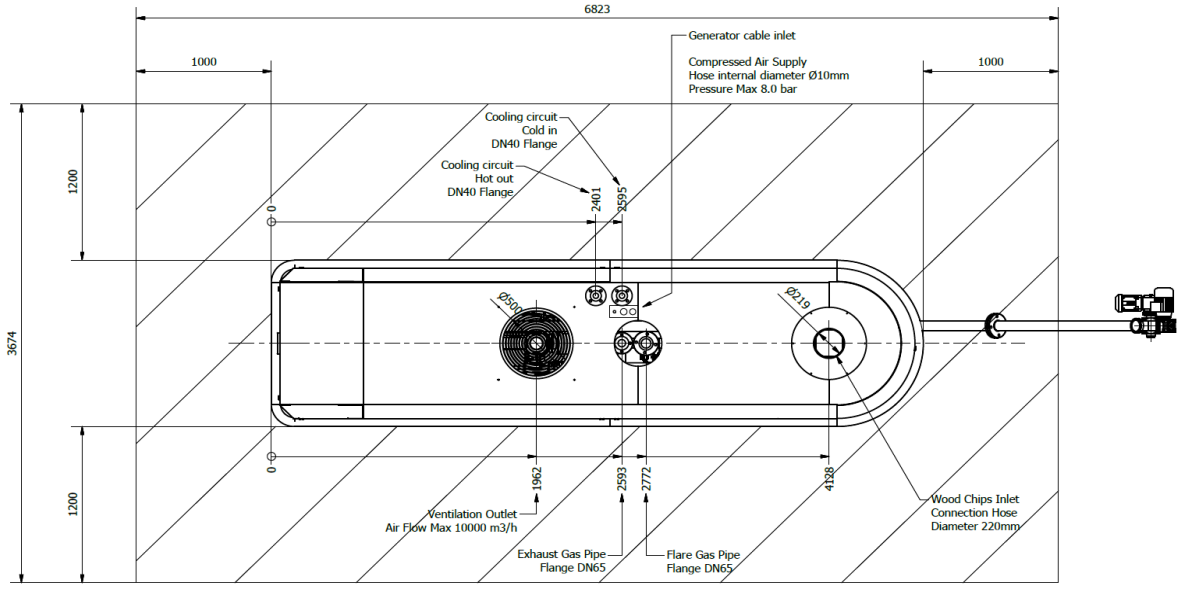

Multiple installations

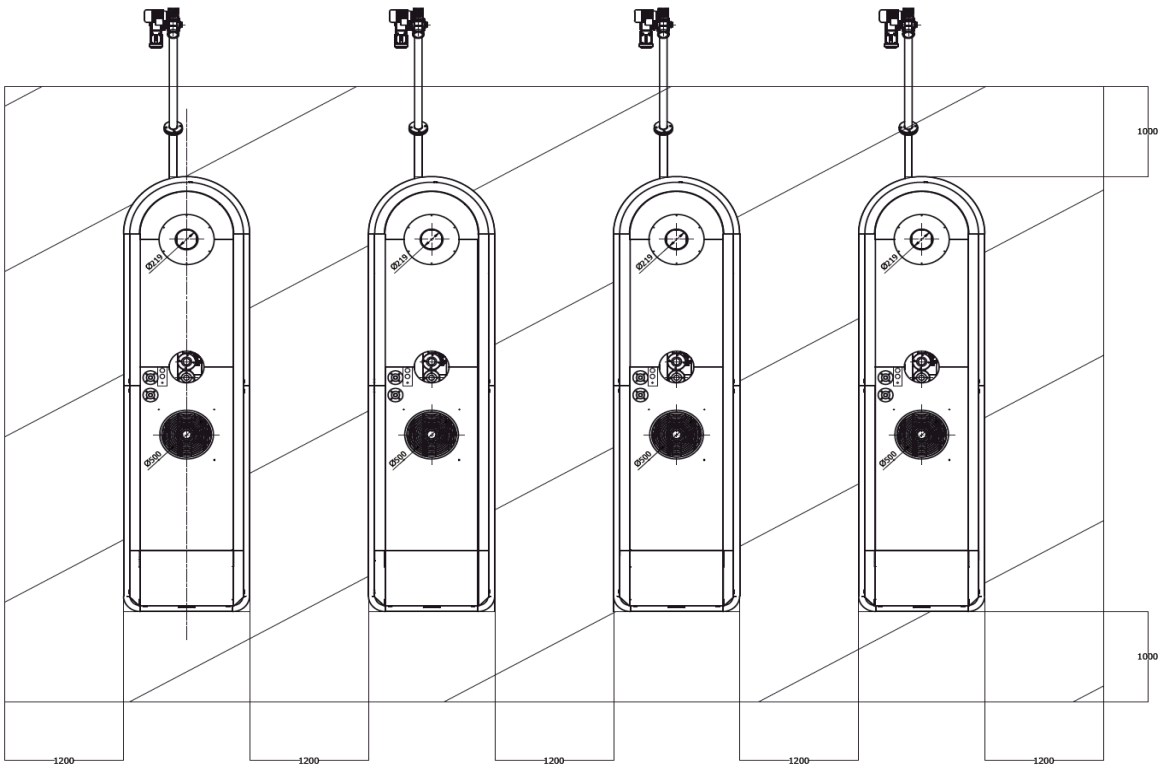

Dimensions			
Weight	4 500	kg	
Length	4 820	mm	
Height	2 500	mm	
Width	1 270	mm	

Space requirements (operation and maintenance)			
Length	6 830	mm	
Height	3 500	mm	
Width	3 680	mm	
Cooling fan outlet diameter	500	mm	
Room	Closed, dry		
Explosion protection	Machine produces and use a potentially explosive gas		
Safety	1 pcs portable carbon monoxide detector included		
Fire protection	Automatic fire protection system recommended		
Room temperature	5…40	°C	
Relative humidity	5…90	%	non-condensing
Air flow for plant cooling, max.	10 000	m^3/h	
Max. back pressure for ventilation pipe	20	Pa	with standard cooling fan

Heat connection			
Flange sizes	DN40		
Input temperature	35…55	°C	max 65 °C
Output temperature	70…80	°C	max 85 °C
Pressure drop	10,17	kPa	
Max. flow approx.	1,4	l/s	depending of fluid mixture

Requirements for compressed air			
Air hose inner diameter	10	mm	
Consumption approx.	1…2	Nl/s	
Inlet pressure	8	bar	
Quality	Class 5		ISO 8573-1, without lubrication

Engine exhaust gas			
Exhaust outlet flange	DN65		
Exhaust gas temperature approx.	500…650	°C	Heat exchanger bypassed
Exhaust gas temperature approx.	160…200	°C	After heat exchanger
Exhaust gas quantity approx.	305	kg/h	
Maximum allowed back pressure	15 000	Pa	

Flare			
Flare outlet flange	DN65		
Maximum pipe length.	10	m	with standard fan
Flare gas temperature approx.	400…550	°C	max. 650°C
Flare gas quantity approx.	46	kg/h	
Flare gas quantity approx.	50	Nm^3/h	

Grid feeding unit		
Manufacturer	Nocart Oy	
Weight	200	kg
Length	500	mm
Width	600	mm
Height	1 800	mm
Voltage	400	VAC
Frequency	50	Hz
Current	86	A
Type	Prallel to grid	

Electrical consumption		
Plant own consumption approx.	1,5…2	kW

Ash		
Ash output dimension	DN65	
Ash produced approx.	500	l/week (approx. 1…2 % from fuel input) full power
Ash output temperature	50…400	°C

Woodgas			
Average composition approx.			
	CO	25	%
	H_2	17	%
	CO_2	8	%
	CH_4	2,5	%
	N_2	47,5	%
Heating value approx.		5,75	MJ/Nm^3

Gas engine		
Manufacturer	Agco power	
Model	84G	
Cylinders	6	
Displacement	8,4	L
Naturally aspirated	Y	

Generator		
Manufacturer	ABB	
Model	M2BA 225 SMB4	
Type	3-phase squirrel cage motor	
Voltage	400	VAC
Frequency	50	Hz
Power	45	kW
Current	83,9	A
Speed	1 479	rpm
cos. phi	0,83	
Cooling	air	

Internet connection	
Recommended	Fixed ADSL

SMS-alarms	
SIM-card size	Standard SIM card

Fuel and consumption			
Fuel	Wood chips		see requirements for fuel
Fuel feed inlet diameter	220	mm	
Fire protection	Automatic fire protection system recommended		
Fuel consumption approx.	4,5	m^3/day	full power
Fuel consumption approx.	37,5	kg/h	full power

Requirements for fuel

The classification of origin and sources of solid biofuels are based on the International Standard SFS-EN ISO 17225-1, Solid biofuels. Fuel specifications and classes. Part 1: General requirements

1. Woody biomass	1.1 Forest, plantation and other virgin wood
	1.1.1 Whole trees without roots
	1.1.1.1 Broad-leaf
	1.1.1.2 Coniferous
	1.1.3 Stemwood
	1.1.3.1 Broad-leaf with bark
	1.1.3.2 Coniferous with bark
	1.1.3.3 Broad-leaf without bark
	1.1.3.4 Coniferous without bark

Forest, plantation and other virgin wood
Forest, plantation and other virgin wood in this group may only have been subjected to size reduction, debarking, drying or wetting. Forest, plantation and other virgin wood includes wood from forests, parks, gardens, plantations and from short rotation forests and coppice.

Wood chips needs to be clean so in cannot include impurities like: Dirt, sand, rocks, metal, etc. Wood chips needs to be natural (untreated). Wood chip particle size needs to be square like not stick. Species that has been tested with good experiences are: birch, pine, spruce, aspen.

Specification of properties for wood chips

Particle size		
Coarse fraction	45 ≤ P ≤ 63 mm	≤ 10 w-%
Main fraction	32 ≤ P ≤ 45 mm	> 70 w-%
Medium fraction	16 ≤ P ≤ 32 mm	≤ 10 w-%
Small fraction	3,15 ≤ P ≤ 16 mm	≤ 10 w-%
Fine fraction	< 3,15 mm	≤ 1,0 %

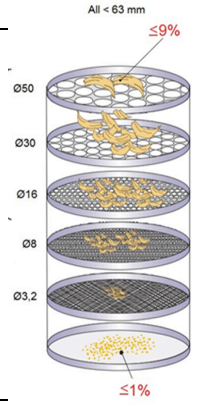

Physical and chemical properties		
Moisture, M (w-% as received)	M15 (≤ 15 %)	ISO 18134-1, ISO 18134-2
Net calorific value, Q (as received)	18,7 MJ/kg (≥ 5,2 kWh/kg)	
Ash, A (w-% of dry basis)	A1.0 (≤ 1,0 %)	ISO 18122
Nitrogen, N (w-% of dry basis)	N0.5 (≤ 0,5 %)	ISO 16948
Sulfur, S (w-% of dry basis)	S0.04 (≤ 0,04 %)	ISO 16994
Chlorine, Cl (w-% of dry basis)	Cl0.02 (≤ 0,02 %)	ISO 16994
Potassium, K (w-% of dry basis)	K0.07 (≤ 0,07 %)	EN 15105:2011